USER MANUAL

ANALOG SEND UNIT
ASU-FR510

REV. 4.5 / FEBRUARY 26, 2016

TEKNIC, INC FAX (585)784-7460 VOICE (585)784-7454

THIS PAGE INTENTIONALLY LEFT BLANK

TABLE OF CONTENTS

TABLE OF CONTENTS 1

INTRODUCTION..... 2

About This Document 2
What Is The Analog Send Unit (ASU)?..... 2
How Does the ASU Work? 3
ASU-FR510 Parts Overview With Callouts..... 3
What's in the Box?..... 3

SAFETY WARNINGS 4

Personal Safety Warnings 4
CE Compliance Warnings 4
General Disclaimer.....5

ELECTRICAL SETUP 6

Hookup Diagram..... 6
DC Input Connector (P10) 6
Analog Input Connector (P9).....7
User I/O Connector (P3)..... 8
User Input 1: Enable 8
User Input 2: Direction 9
User output 1: HLFB Output..... 9
ClearPath I/O Connector (P4) 10

CONFIGURING YOUR CLEARPATH MOTOR 11

Configuring ClearPath For Analog Velocity Control 11
Configuring ClearPath For Analog Torque Control.....12

CONFIGURING THE ASU 13

Before You Begin Calibration.....13
Performing Zero Calibration.....13
Performing Span Calibration 14
Swapping the Mode of Input 1 14

APPENDIX A: SPECIFICATIONS..... 15

APPENDIX B: MOUNTING INFORMATION..... 16

Board Mounting Hole Dimensions.....16
DIN Rail Mount.....16

APPENDIX C: CONNECTOR REFERENCE 17

Connector Pinout Tables and Mating Parts.....17

APPENDIX D: LED BLINK CODES 18

APPENDIX E: EXAMPLE APPLICATION..... 19

Controlling ClearPath Using 0-10V Analog Signal.....19
Getting Started 19
Configure Your ClearPath Motor 19
Configure The Analog Send Unit 19
Start Controlling Your ClearPath Motor.....21

INTRODUCTION

ABOUT THIS DOCUMENT

This document contains information related to the setup, operation and application of the Analog Send Unit (p/n: ASU-FR510), which is intended for use with Teknic's ClearPath family of integrated servo motors.

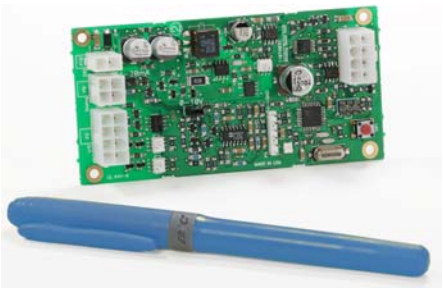

ASU-FR510

WHAT IS THE ANALOG SEND UNIT (ASU)?

For several reasons, but primarily for enhanced noise immunity, ClearPath motors were designed for use with *digital* control signals. Nevertheless, some users would like to control ClearPath motors with analog control signals. The Analog Send Unit (ASU) was designed to bring this functionality to the ClearPath platform in a way that preserves most of its inherent noise immunity.

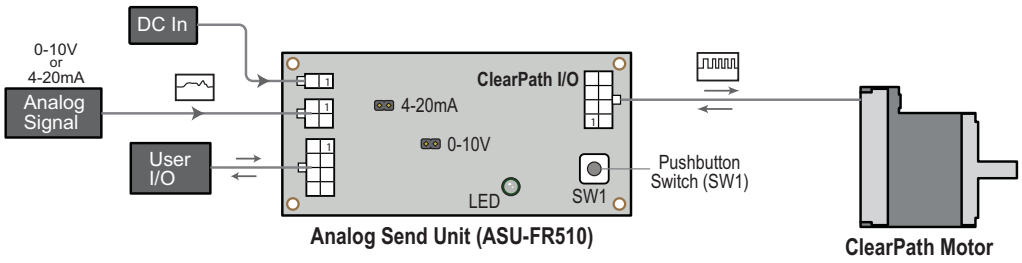

Analog Send Unit Features

- High common-mode analog input noise immunity
- Analog and digital filtered input for high differential noise rejection
- 0.2% linearity
- 0.25% accuracy (once calibrated)
- Jumper selectable 0-10V or 4-20mA operation
- Single pushbutton "Zero" and "Span" calibration
- Uses cost-effective, locking, easy to terminate Molex Minifit connectors
- Noise immune all-digital connection to a ClearPath motor
- Digital inputs for enable and direction control
- Digital feedback output for "at speed" signaling
- Compatible with DIN rail mounting clip (sold by 3rd party)
- Operates from industry standard 24VDC
- Protected from common wiring errors

Analog Send Unit System and Features

HOW DOES THE ASU WORK?

The ASU is a small, low cost, analog-to-digital signal converter that takes the user's analog control voltage or current (0-10V or 4-20mA) and outputs ClearPath-compatible digital pulses. The ASU is compatible with all ClearPath MC-series motors (MCVC and MCPV). If you're familiar with the operation and wiring of a ClearPath motor, then the Analog Send Unit should be easily understood.

Steps for using the ASU with a ClearPath motor:

1. Connect external devices to the ASU.
2. Modify three settings in your ClearPath motor.
3. Choose between analog *voltage* or analog *current* control.
4. Calibrate the system.
5. Start sending analog control signals to the ASU.

From this point, the ASU processes the analog signal and outputs precisely timed digital pulses that serve as input to the ClearPath motor. This command pulse stream tells ClearPath how fast to spin or how much torque to apply (depending on the ClearPath mode of operation).

Motor speed or torque is directly proportional to the amplitude of the analog signal so it's easy to determine expected motor speed or torque from a given value of analog voltage or current.

ASU-FR510 PARTS OVERVIEW WITH CALLOUTS

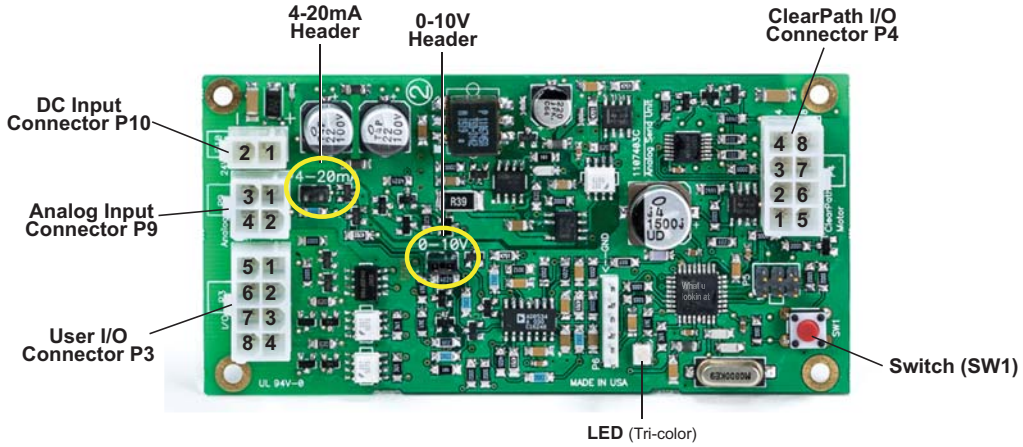

ASU-FR510 with callouts

WHAT'S IN THE BOX?

This product ships as a PWBA (board only, as shown above).

SAFETY WARNINGS

IMPORTANT: Read this section before attempting to install, apply power to, or operate an Analog Send Unit/ClearPath motor system. Failure to understand and follow the safety information presented in this document could result in property damage, bodily injury or death.

PERSONAL SAFETY WARNINGS

- Do not wear loose clothing or unconfined long hair when using motion control devices. Remove ties, rings, watches and other jewelry before operating an unguarded motor.
- Do not operate motion control devices if your alertness, cognitive function, or motor skills are impaired.
- Caution: The ASU can be configured to command motor motion immediately upon application of power.
- Learn how the modes of operation work before attempting to power, enable, or otherwise operate an Analog Send Unit/ClearPath motor system.
- Install and test emergency stop devices and controls before using any motion control system.
- Before powering the ASU/ClearPath system, secure the ClearPath motor to a stable, solid work surface and install a finger-safe guard or barrier between the user and the motor shaft.
- Do not allow cables or other loose items to drape over, or rest near the ClearPath motor shaft.
- Never place fingers, hands, or other body parts on or near a powered motor.
- Thoroughly test all ClearPath/Analog Send Unit applications at low speed to ensure the motor, controls, and safety equipment operate as expected.

CE COMPLIANCE WARNINGS

- There are no user serviceable parts in this product.
- Follow all instructions and use the product only as directed.
- Safety of any system incorporating this equipment is the responsibility of the system designers and builders.

GENERAL DISCLAIMER

The User is responsible for determining the suitability of products for their different applications. The User must ensure that Teknic's products are installed and utilized in accordance with all local, state, federal and private governing bodies and meet all applicable health and safety standards.

Teknic has made all reasonable efforts to accurately present the information in the published documentation and shall not be responsible for any incorrect information which may result from oversights. Due to continuous product improvements, the product specifications as stated in the documentation are subject to change at any time and without notice. The User is responsible for consulting a representative of Teknic for detailed information and to determine any changes of information in the published documentation.

If Teknic's products are used in an application that is safety critical, the User must provide appropriate safety testing of the products, adequate safety devices, guarding, warning notices and machine-specific training to protect the operator from injury.

ELECTRICAL SETUP

HOOKUP DIAGRAM

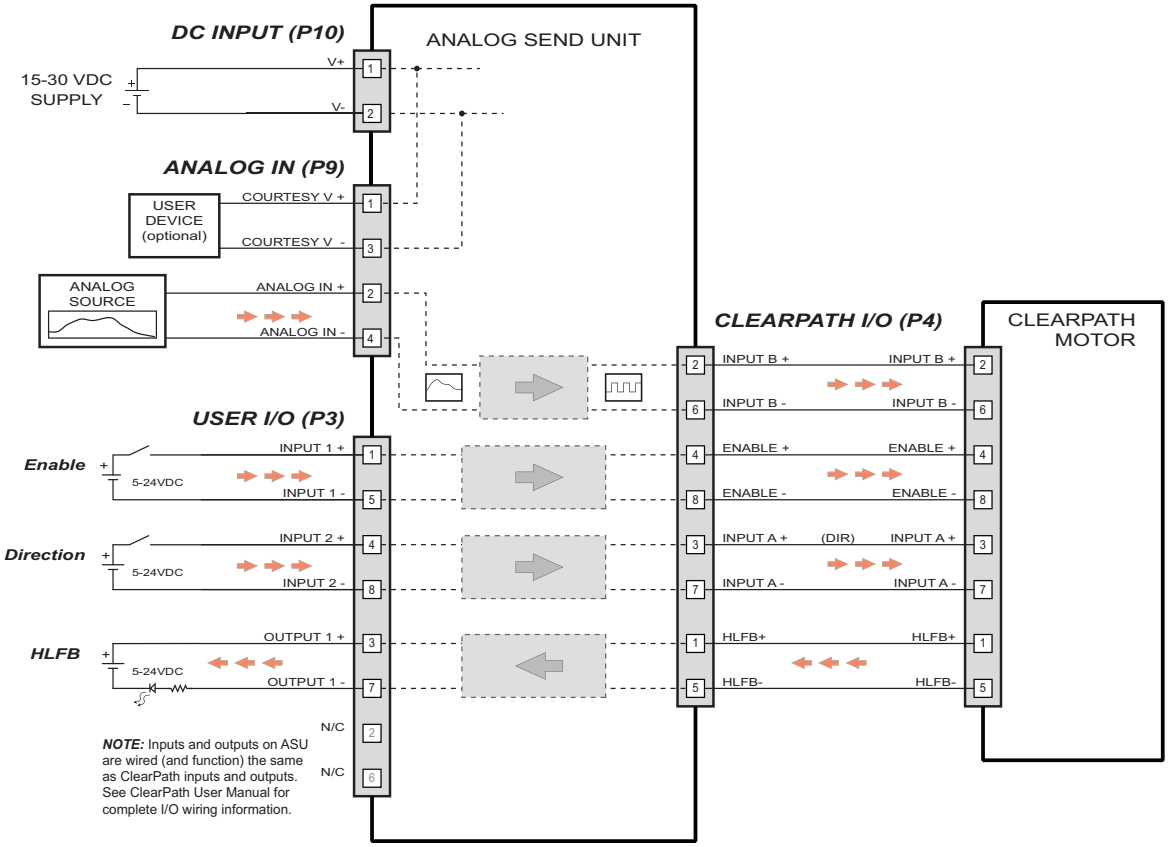

ASU-FR510 hookup diagram

DC INPUT CONNECTOR (P10)

- **Function:** Takes in user-supplied 24VDC (nominal) power. Note: ASU will function properly at voltages ranging from 15-30VDC.
- **Connector Type:** Molex Minifit Jr, 2-position connector, labeled "24V" on circuit board. See Appendix C for connector mating parts.

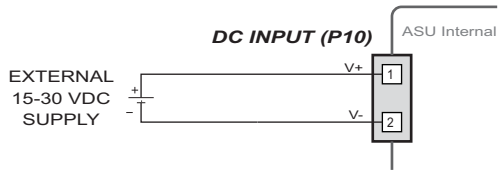

DC Input Connector (P10)

- DC Input current requirement is 50mA nominal, *assuming no external devices are attached to the Courtesy Power circuit (on connector P9).*

- **Note:** If you connect any device(s) to the courtesy supply circuit (P9, pins 1 and 3), verify that your DC supply has sufficient current available. To determine current requirement, use calculation: 50mA + [current draw from external devices].
- **Note:** The ASU features under-voltage lockout functionality, so if the power supply voltage drops below approximately 14 V, the device will go into a shutdown state until the supply is completely powered off and powered back on again.

ANALOG INPUT CONNECTOR (P9)

- **Function:** Takes in the user's analog control signal. P9 also includes a courtesy DC power circuit for user devices.
- **Connector Type:** Molex Minifit Jr, 4-position connector, labeled "Analog" on circuit board. See Appendix C for connector mating parts.

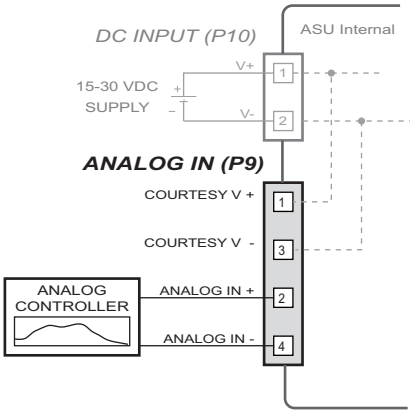

Analog Input Connector (P9)

- **Before applying an analog signal to pins 2 and 4**, verify that the voltage/current selection jumper is placed on the appropriate header (0-10V or 4-20mA). This applies even if the ASU is powered off.
- Stay within the recommended analog ranges of 0-10 V or 4-20mA ranges. Operation is not guaranteed for analog values outside this range.
- **Note:** If you connect any device(s) to the courtesy supply circuit (P9, pins 1 and 3), verify that your DC supply has sufficient current available. To determine current requirement, use calculation: 50mA + [current draw from external devices].
- **Note:** The analog input circuit can survive voltages from -25V to + 25V.

USER I/O CONNECTOR (P3)

- **Function:** Provides access to User Inputs 1 and 2, and Output 1.
- **Connector Type:** Molex Minifit Jr. 8-position connector, labeled "I/O" on circuit board. See Appendix C for connector mating parts.
- **Cable Option #1:** Teknic offers an 8-pin Minifit to flying leads cable for I/O wiring:

  Teknic Part number: CPM-CABLE-CTRL-MU120
  Connectors: 8-pin Molex Minifit to flying leads
  Length: 3.05 m (10 ft)
- **Cable Option #2:** Teknic also makes a 55 ft. Molex Minifit 8-pin to Minifit 8-pin cable that can be cut in half to make 2 flying leads cables.

  Teknic Part number: CPM-CABLE-CTRL-MM660
  Connectors: 8-pin Molex Minifit to 8-pin Molex Minifit
  Length: 16.775 m (55 ft)
- **Note:** Inputs and output on the ASU operate (and are wired) the same way as the inputs and outputs on a ClearPath motor. Refer to the ClearPath User Manual for I/O wiring information.

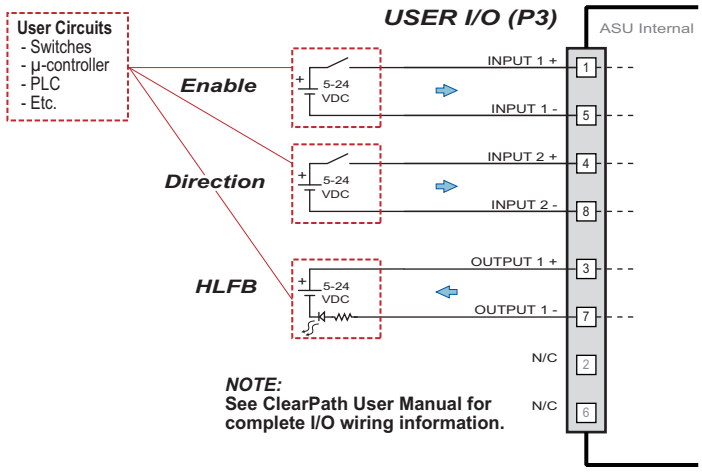

User I/O Connector (P3)

USER INPUT 1: ENABLE

DESCRIPTION

User Input 1 controls the enable state of your ClearPath motor. There are two user-settable modes available this input as described below.

MODE 1: ENABLE/DISABLE

Mode 1 is the factory default setting for User Input 1. It works in the same way as the ClearPath motor's native enable input.

- Assert Input 1 to Enable the motor. [LED = green flicker]

- De-assert Input 1 to Disable the motor. [LED = green solid] **Note:** The motor shaft can be spun freely when the motor is disabled.
- The LED is always green in Mode 1 during normal operation.

Caution: When enabled, the motor windings are energized and the motor will respond to any applied analog signal. This can result in immediate motion upon enable.

MODE 2: INHIBIT/ENABLE

- Assert Input 1 to Inhibit the motor. [LED = yellow solid] When Inhibited the motor actively servos to maintain position, but will not respond to the analog input.
- De-assert Input 1 to Enable the motor. [LED = yellow flicker]

USER INPUT 2: DIRECTION

DESCRIPTION

Input 2 controls the motor's direction of rotation. It is functionally identical to the direction input on the ClearPath motor itself.

FUNCTION

- Assert Input 2 for clockwise shaft rotation (as seen looking into the motor shaft).
- De-assert Input 2 to rotate shaft counterclockwise. (as seen looking into the motor shaft).

USER OUTPUT 1: HLFB OUTPUT

GENERAL DESCRIPTION

User Output 1 provides access to the ClearPath HLFB signal.

- This output is identical in function and wiring to the ClearPath HLFB output. See the ClearPath User Manual for information on output wiring.
- Inputs recognize an open or 0 V input as a logical ‘0’, and any level from 3 V to 24 V as a logical ‘1’.

CLEARPATH I/O CONNECTOR (P4)

- **Function:** Sends and receives I/O signals to and from the ClearPath motor.
- **Connector Type:** Molex Minifit Jr, 8-pin connector, labeled "ClearPath Motor" on the circuit board. See Appendix C for connector mating parts.
- **Optional Cable:**

  Teknic PN: CPM-CABLE-CTRL-MM660

  Connectors: 8-pin Molex Minifit to 8-pin Molex Minifit

  Length: 16.775 m (55 ft)

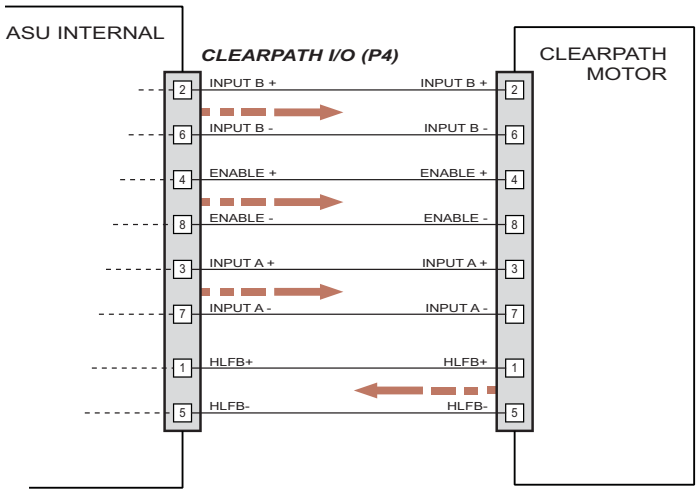

ClearPath I/O Connector (P4)

- All return signals on this connector are tied directly to analog ground corresponding to pin 4 of the Analog Input connector P9 (not the power supply input ground). These signals are isolated inside the ClearPath motor itself, so this fact will have no consequence at all as long as P4 is connected properly, and *only* to a ClearPath motor.

CONFIGURING YOUR CLEARPATH MOTOR

This section describes how to configure a ClearPath motor to work correctly with your Analog Send Unit. This involves modifying a few settings and should take only a few minutes to complete.

CONFIGURING CLEARPATH FOR ANALOG VELOCITY CONTROL

1. Power up the ClearPath motor.
2. Open the ClearPath MSP application and establish a USB connection to the ClearPath motor.
3. In MSP, select the ClearPath mode: "Follow Digital Velocity Command", then select "Frequency Command".
4. In MSP, set Max and Min Frequency to 10 kHz (Max) and 5 kHz (Min). Important: Min/Max Frequency settings must be set exactly as shown.
5. Enter a value for Max Speed. This is the motor speed you'll command when your analog signal is set to maximum (10V or 20mA as the case may be). Note: Be sure to enter a Max Speed that your ClearPath motor is capable of reaching.

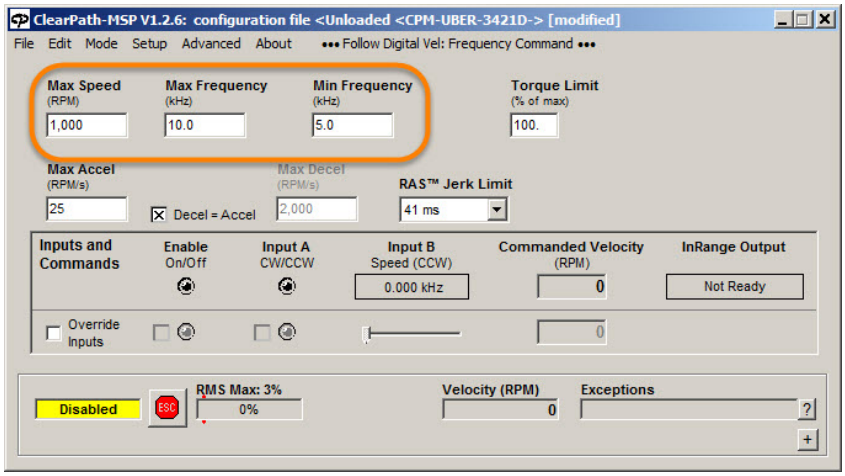

ClearPath MSP setup for ASU velocity control

6. Set all other ClearPath settings per your application requirements. Refer to the ClearPath User Manual if you have additional questions on modes and settings.

CONFIGURING CLEARPATH FOR ANALOG TORQUE CONTROL

1. Power up the ClearPath motor.
2. Open the ClearPath MSP application and establish a USB connection to the ClearPath motor.
3. In MSP, select the ClearPath mode: "Follow Digital Torque Command", then select "Frequency Command".
4. In MSP, set Max and Min Frequency to 10 kHz (Max) and 5 kHz (Min). Important: Min/Max Frequency settings must be set exactly as shown.
5. Enter a value for Max Torque. This is the motor torque you'll command when your analog signal is set to maximum (10V or 20mA as the case may be).

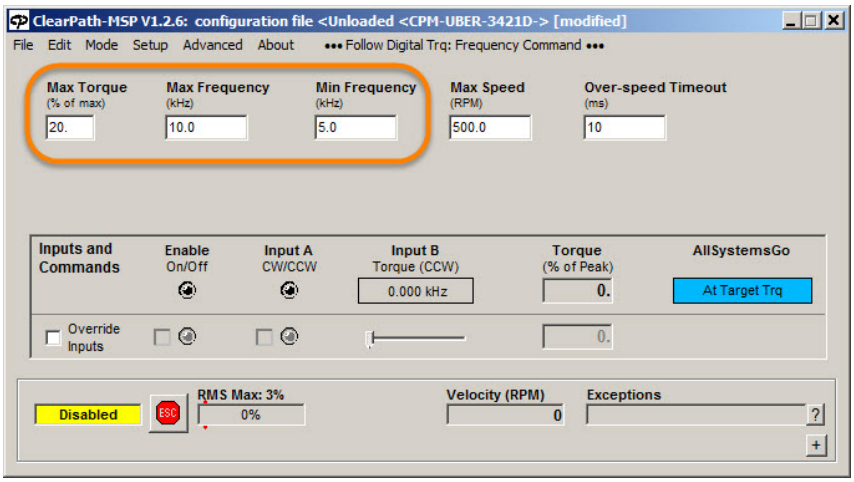

ClearPath MSP setup for ASU torque control

6. Set all other ClearPath settings per your application requirements. Refer to the ClearPath User Manual if you have additional questions on modes and settings.

CONFIGURING THE ASU

BEFORE YOU BEGIN CALIBRATION

Important: Before installing the analog source jumper–this selects the type of analog source you'll be using–verify that the actual analog signal is turned off or disconnected from the Analog Input connector (P9). Applying an analog signal before this jumper is placed can introduce error into the calibration process.

1. Place the analog selection jumper on the appropriate header for your analog input source, either "0-10V" or "4-20mA".
2. Set Input 1 to Mode 1. In Mode 1, LED is green. If LED is yellow, you're in Mode 2. See "Swapping the Mode of Input 1" for directions on how to change modes.
3. De-assert Input 1. "De-assert", in this context, means to open or disconnect the circuit such that current cannot flow. The LED will be solid green when Input 1 is de-asserted.

PERFORMING ZERO CALIBRATION

Zero calibration "trains" the ASU to recognize the exact analog voltage or current level that will equate to zero motor speed (or torque) during operation.

1. Read "Before You Begin Calibration" above.
2. Press and hold SW1 until LED turns solid red (approximately 2 seconds).
3. Release SW1. LED will blink slow red (1.25 Hz). The device is now ready to capture the Zero calibration value.
4. Adjust your analog signal to 0.0VDC or 4mA, depending on your analog source jumper setting.
5. Press and hold SW1 until the ASU LED flashes an alternating red/green pattern (Accept Code).
6. Zero capture is complete. Note: The ASU will automatically return to normal operation after a few seconds (the LED will return to solid green state).

Note: If calibration is attempted when ASU is not in the correct mode (as described in step 1), ASU will prohibit entry into calibration mode. LED will flash alternating red/yellow (Reject Code) and return to normal operation with no changes saved.

Note: If at any time during calibration the motor becomes enabled, ASU will immediately exit calibration mode and flash alternating red/yellow Reject Code. Changes will not be saved.

PERFORMING SPAN CALIBRATION

Span calibration "trains" the ASU to recognize the exact analog voltage or current level that will equate to your specified Max Speed (or Torque) setting during operation.

1. Read "Before You Begin Calibration" (previous page).
2. Press and hold SW1 until LED turns solid red (approximately 2 seconds).
3. Release SW1. LED will blink slow red (1.25 Hz).
4. Quickly press/release SW1. This will cause the LED to blink fast red (5 Hz). The device is now ready to capture the Span calibration value.
5. Adjust your analog signal to 10.0VDC or 20mA (depending on your analog source jumper settings).
6. Press and hold SW1 until the ASU LED flashes an alternating red/green pattern (Accept Code).
7. Span capture is complete. Note: The ASU will automatically return to normal operation after a few seconds (the LED will return to solid green state).

Note: If calibration is attempted when ASU is not in the correct mode (as described in step 1), ASU will prohibit entry into calibration mode. LED will flash alternating red/yellow (Reject Code) and return to normal operation with no changes saved.

Note: If at any time during calibration the motor becomes enabled, ASU will immediately exit calibration mode and flash alternating red/yellow Reject Code. Changes will not be saved.

SWAPPING THE MODE OF INPUT 1

CAUTION: Performing this procedure may cause the motor to enable and move! Always assume high speed motor rotation may occur when changing modes. Set analog control signal to its lowest setting (0v or 4mA) prior to swapping modes.

1. Apply DC power to the ASU.
2. Determine in which mode Input 1 is presently set. For Mode 1, LED will be green. For Mode 2, LED will be yellow.
3. To swap modes, press and hold SW1 for about 8 seconds. Keep holding SW1 until the LED changes to the new mode color. **Note:** LED will temporarily turn solid red during this procedure–this is normal.

APPENDIX A: SPECIFICATIONS

DC Input Power	
DC Input Voltage Range	15-30VDC
DC Input Absolute Maximum Voltage	40VDC
DC Input, Maximum Power Consumption	600mW @15VDC, 850mW @24VDC, 1000mW @30VDC
Analog Input (0-10VDC Mode)	
Active Voltage Range	0-10VDC
Survivable Continuous Voltage	-60 to +60VDC
Analog Input (4-20mA Mode)	
Active Current Range	4-20mA
Voltage Drop (Typical)	2.1V @4mA, 5.5V drop @20mA
Survivable Continuous Voltage	-60 to +25VDC
Digital Inputs	
Digital Input Type	Isolated Loop
Minimum On Voltage	+3.0 VDC
Maximum Off Voltage	+2.0 VDC
Absolute Maximum Input Voltage	+26 VDC
Digital Input Current Draw (Typical)	2mA @4.5V, 12mA @24VDC
Digital Output	
Digital Output Type	Isolated, Open Collector
Absolute Maximum Voltage Range	-0.5 to +40VDC
Digital Output Maximum On Voltage @5mA Load	See ClearPath HLFB
Output Frequency Rate	
Frequency Output at "Zero" Setting	5 kHz
Frequency Output at "Span" Setting	10 kHz
Physical	
Weight	34 g. (1.2oz.)
Dimensions	107mm x 53mm x 16.5mm (4.21 in. x 2.1 in. x .65 in.)
Enclosure	No
Operating Environment	
Temperature Range	0-40°C
Humidity	10% - 90% (non-condensing)
Pollution Level	2
Certifications/Compliance	
Safety	UL-508C (pending), EN61010 (pending)
RF Emissions	Meets EN55011/22 Class A requirements
RoHS	Compliant

APPENDIX B: MOUNTING INFORMATION

BOARD MOUNTING HOLE DIMENSIONS

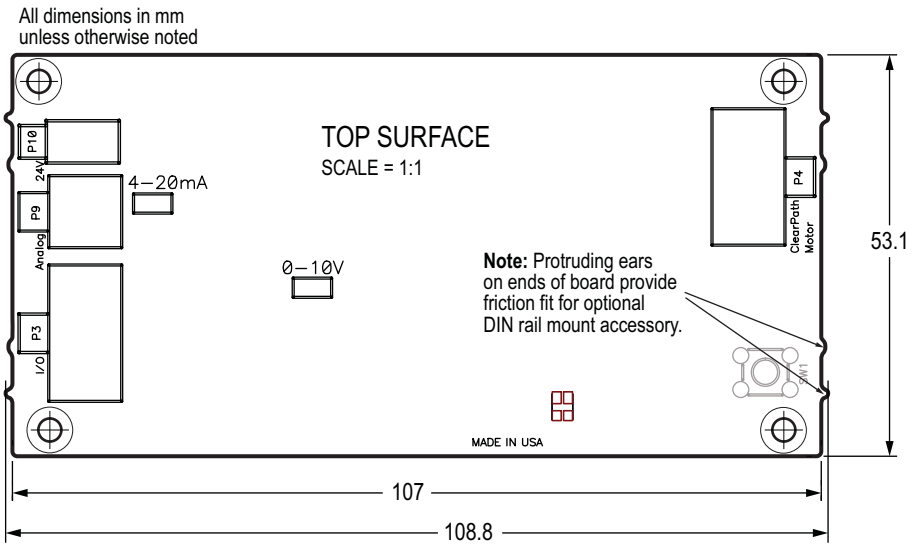

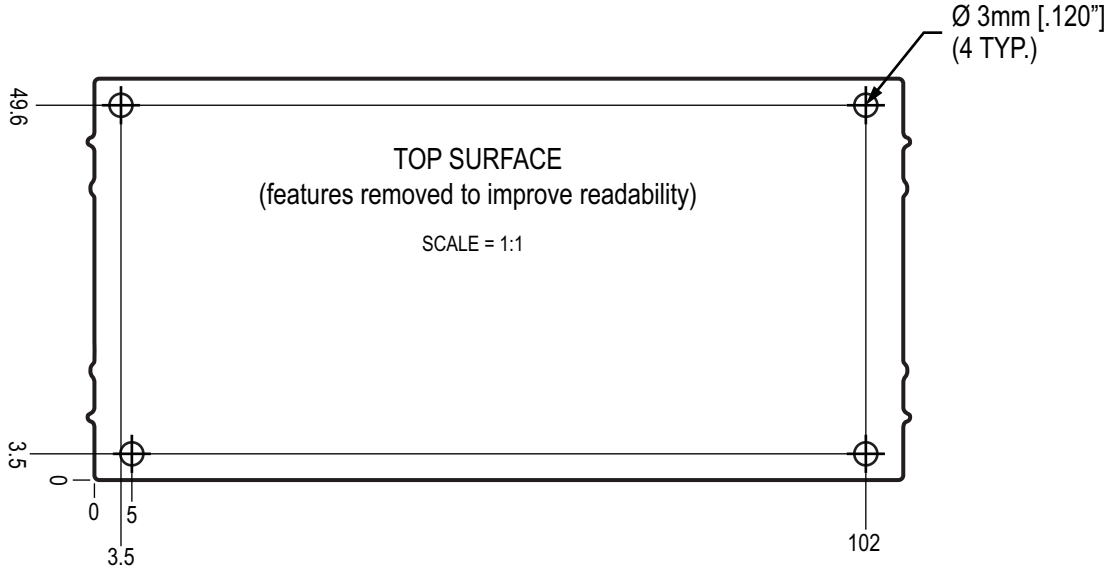

DIN RAIL MOUNT

The ASU board fits the following third-party DIN rail mount:

OKW Enclosures, Part# B6720443.

See the product page on the web. This is not available through Teknic.

APPENDIX C: CONNECTOR REFERENCE

CONNECTOR PINOUT TABLES AND MATING PARTS

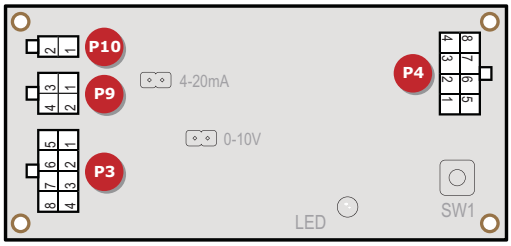

ASU-FR510

P3, P4 Mating Parts

Connector Housing 8-circuit
Molex/39-01-2080

Terminals 22-28 AWG
Molex/39-00-0047

Crimp Tool 22-28 AWG
Molex/63819-1000

Terminal Extractor Tool
Molex/11-03-0044

Cable Stock 22-24AWG

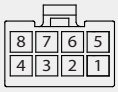

Molex 39-01-2080
WIRE ENTRY VIEW

P3 User I/O

Pin	Name	Pin	Name	Notes
1	Input 1+	5	Input 1-	Enable/Disable or Enable/Inhibit
2	Output 2+	6	Output 2-	Not used
3	Output 1+	7	Output 1-	HLFB Pass-through (from ClearPath)
4	Input 2+	8	Input 2-	Direction Pass-through (to ClearPath)

P4 ClearPath I/O

Pin	Name	Pin	Name	Notes
1	HLFB+	5	HLFB-	
2	Input B+	6	Input B-	
3	Input A+	7	Input A-	
4	Enable +	8	Enable -	

P9 Mating Parts

Connector Housing 4-circuit
Molex/39-01-2040

Terminals 22-28 AWG
Molex/39-00-0047

Crimp Tool 22-28 AWG
Molex/63819-1000

Terminal Extractor Tool
Molex/11-03-0044

Cable Stock 24-28AWG

Molex 39-01-2040
WIRE ENTRY VIEW

P9 Analog In, Courtesy Power Out

Pin	Name	Pin	Name	Notes
1	Courtesy V+	3	Courtesy V-	Optional power for user device
2	Analog In+	4	Analog In-	Analog control signal input

P10 Mating Parts

Connector Housing 2-circuit
Molex/39-01-3022

Terminals 22-28 AWG
Molex/39-00-0047

Crimp Tool 22-28 AWG
Molex/63819-1000

Terminal Extractor Tool
Molex/11-03-0044

Cable Stock 24-28AWG

Molex 39-01-3022
WIRE ENTRY VIEW

P10 DC Power In

Pin	Name	Notes
1	V+	DC Power to ASU board, (24VDC nominal)
2	V-	

APPENDIX D: LED BLINK CODES

LED State	Operation	Indication	Notes
Green solid	Normal	Motor is disabled. **OK to Calibrate.**	Input 1 is in Mode 1. Input 1 is de-asserted or disconnected
Green flicker	Normal	Motor is enabled.	Input 1 is in Mode 1. Input 1 is asserted.
Yellow solid	Normal	Motor is inhibited.	Input 1 is in Mode 2. Input 1 is asserted.
Yellow flicker	Normal	Motor is enabled.	Input 1 is in Mode 2. Input 1 is de-asserted or disconnected.
Red flash (slow)	Calibration	Zero calibration: **Ready to capture**.	To capture: press and hold SW1 ~2 sec.
Red/Green alt.	Calibration	Zero calibration: **Capture accepted**.	"Accept Code"
Red flash (fast)	Calibration	Span calibration: **Ready to capture**.	To capture: press and hold SW1 ~2 sec.
Red/Green alt.	Calibration	Span calibration: **Capture accepted**.	"Accept Code"
Red/Yellow alt.	Illegal request	Request rejected. No change was made.	"Reject Code"

APPENDIX E: EXAMPLE APPLICATION

CONTROLLING CLEARPATH USING 0-10V ANALOG SIGNAL

This following is a hypothetical ASU/ClearPath application describing how an analog voltage of 0-10V could be used to control the velocity of a ClearPath motor.

GETTING STARTED

- Verify that your ClearPath motor has been properly tuned. See ClearPath User Manual for tuning information.
- Connect all cables/external components to the ASU. **Important:** Do not apply an analog signal to the Analog Input until the analog selection jumper has been installed on the appropriate header (the 0-10V header for this example). Doing so will cause calibration errors.

CONFIGURE YOUR CLEARPATH MOTOR

1. Power up ClearPath motor.
2. Open ClearPath MSP (software) and establish a USB connection to the ClearPath motor.
3. In MSP, select the ClearPath mode: "Follow Digital Velocity Command", then select "Frequency Command".
4. In MSP, set Max and Min Frequency to 10 kHz (Max) and 5 kHz (Min). These exact settings are required.
5. In MSP, set Max Speed to 1000 RPM (for this example).
6. Set other ClearPath settings as your application requires.

CONFIGURE THE ANALOG SEND UNIT

SELECT ANALOG VOLTAGE SIGNAL SOURCE

1. Place jumper block on the ASU's 0-10V header.
2. Apply power to the ASU.

SET USER INPUT 1 TO MODE 1

User Input 1 must be set to Mode 1 *and* de-asserted in order to begin calibration. The ASU LED will be on solid green if you're settings are correct.

CALIBRATE THE ASU (SET ZERO AND SPAN VALUES)

Set Zero

Zero calibration "trains" the ClearPath to recognize the lower limit of your analog signal (0V in this case). Thus, when 0V is applied to the analog input, the motor is commanded to 0 RPM.

1. Input 1 must be set to Mode 1 and de-asserted as described above. [LED should be solid green]
2. Hold SW1 down until LED turns solid red.
3. Release SW1; LED will flash slow red. [Ready to calibrate the Zero value]
4. Set your analog control voltage to 0.0 volts.
5. Press and hold SW1 until LED flashes alternating green/red confirmation pattern. [Zero setting accepted]
6. Wait. ASU automatically returns to normal operation after a few seconds. [LED returns to solid green]

Set Span

Span calibration "trains" the ClearPath to recognize the upper limit of your analog signal (10V in this case). Thus, when 10V is applied at the analog input, the motor is commanded to spin at the Max Speed value you specified. We chose 1000 RPM for this example.

1. Input 1 must be set to Mode 1 and de-asserted as described above. [LED should be solid green]
2. Hold SW1 down until LED turns solid red.
3. Release SW1; LED will flash slow red. Don't capture yet!
4. Quickly press and release SW1. LED will flash fast red. [Ready to calibrate the Span value]
5. Set analog control voltage to 10.0 volts.
6. Hold SW1 down until LED flashes alternating green/red confirmation pattern. [Span setting accepted]
7. Wait. ASU automatically returns to normal operation after a few seconds. [LED returns to solid green]

Caution: Immediate high-speed motion will occur if you assert Input 1 (Enable) at this point. Set analog signal to 0.0V.

START CONTROLLING YOUR CLEARPATH MOTOR

1. ***Before enabling your ClearPath motor***, set the analog signal back to the Zero setting (0.0V).
2. Assert Input 1 to Enable the ClearPath motor. The LED should begin flickering green.

   Safety Warning: The motor windings are now energized. Always assume the motor will spin upon enable, regardless of the analog signal settings.

3. Start controlling your ClearPath motor by varying voltage between 0V and 10V. The graph below shows the relationship between analog voltage and motor speed.

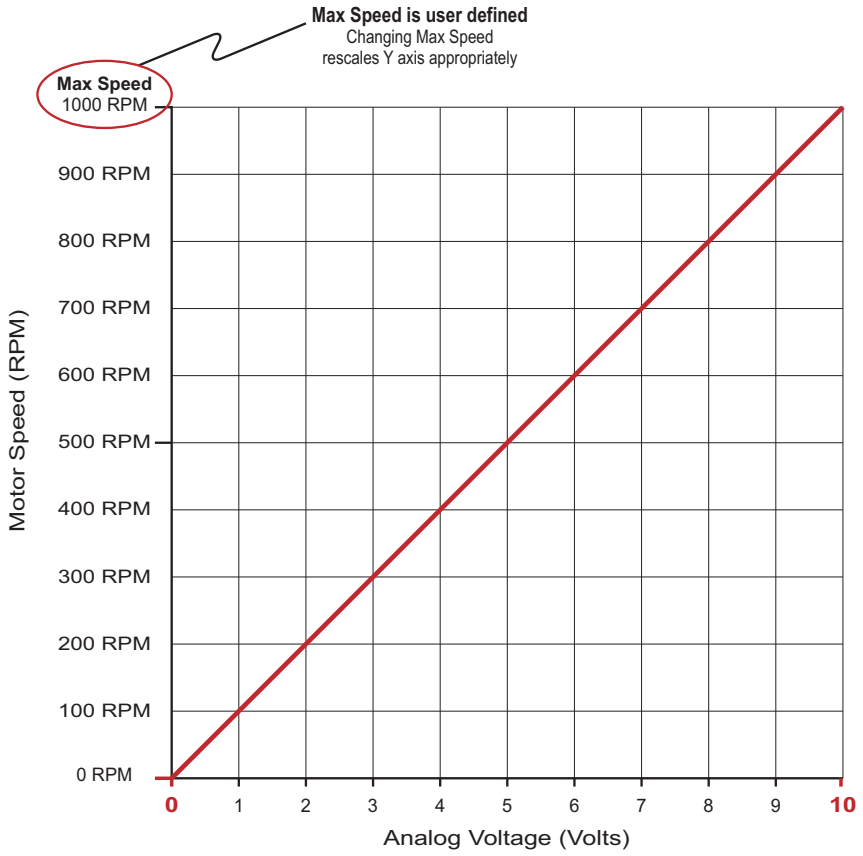

Teknic, Inc.
115 Victor Heights Pkwy
Victor, NY 14564

© 2016 TEKNIC INCORPORATED, ALL RIGHTS RESERVED